AMERISINK

GRANITE COMPOSITE

UNDERMOUNT GRANITE COMPOSITE SINKS

AS616

Features

- 31.75” x 20.5” x 9”/9”
- Undermount sink
- Up to 85% Quartzite and up to15% Acrylic
- Highly resistant to scratches, stains, and heat
- Acrylic natural sound dampener, 100% recyclable
- Easy maintenance
- All the way color through

Color:
Coffee, Diamond White, Miro White, Pearl Black and Silver Grey

Product Diagram

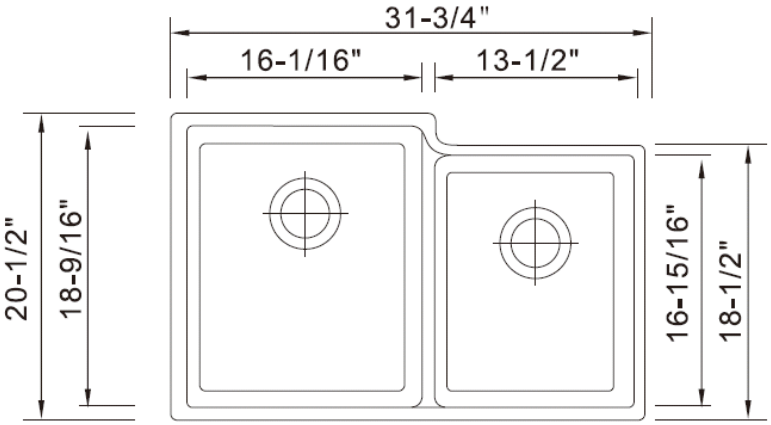

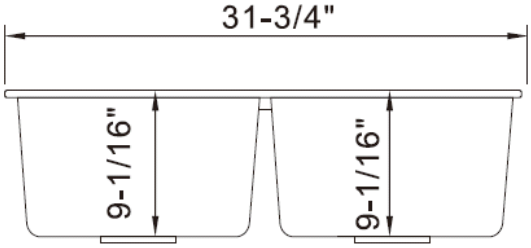

1-877-500-SINK (7465)

WEST COAST WAREHOUSE: 510-667-9998 EAST COAST WAREHOUSE: 404-691-5088

WWW.AMERISINK.COM