AMERISINK

LEGEND

UNDERMOUNT STAINLESS STEEL SINK

AS3330

Features

- 28.78" x 18.75" x 5.5"
- 18 gauge, 304 stainless steel
- Undermount sink
- Handcrafted
- Easy-to-clean, brushed finish
- Spray insulated undercoating & sound pads
- Includes template & installation hardware
- Limited lifetime warranty

OPTIONAL ACCESSORY:
BG 3339 Bottom Grids

CODES:
ASME A112.19.3/CSA B45.4, cUPC
ADA Compliant

Product Diagram

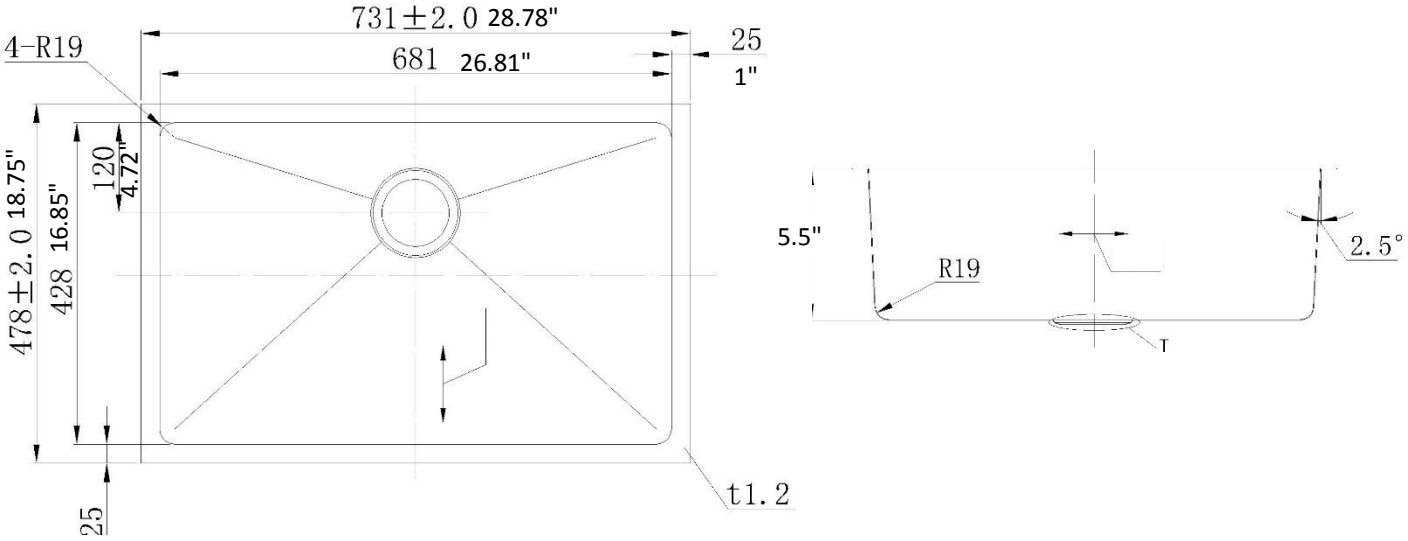

1-877-500-SINK (7465)

WEST COAST WAREHOUSE: 510-667-9998 EAST COAST WAREHOUSE: 404-691-5088

WWW.AMERISINK.COM