AMERISINK

FIRECLAY

APRON KITCHEN SINK

AS245

Features

- 31" x 18.875" x 10"
- Fireclay
- Apron sink
- Without faucet hole
- Without overflow

AVAILABLE COLORS:
White

CODES:
ASME A112.19.2/CSA B45.1

Product Diagram

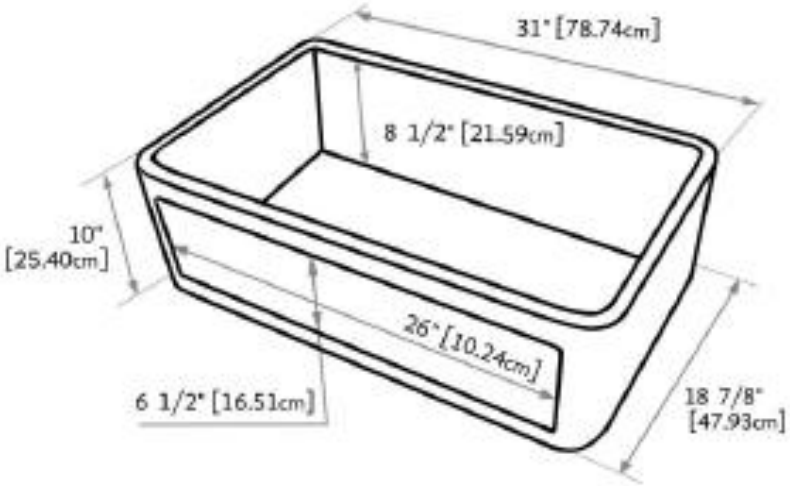

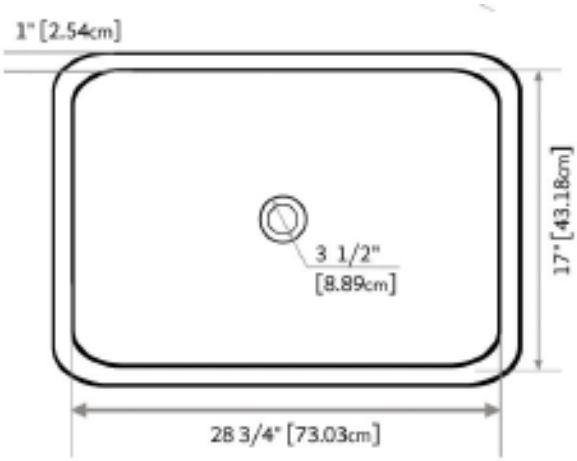

1-877-500-SINK (7465)

WEST COAST WAREHOUSE: 510-667-9998 EAST COAST WAREHOUSE: 404-691-5088

WWW.AMERISINK.COM