AMERISINK

TREND

UNDERMOUNT STAINLESS STEEL SINK

AS1356

Features

- 31.22" x 18.1" x 7.5"/5.75"
- 18 gauge, 304 stainless steel
- Undermount sink
- Easy-to-clean, brushed finish
- Spray insulated undercoating & sound pads
- Includes template & installation hardware
- Limited lifetime warranty

OPTIONAL ACCESSORY:
BG 135B Bottom Grids for Larger Bowl
BG 135S Bottom Grids for Smaller Bowl

CODES:
ASME A112.19.3/CSA B45.4, cUPC

Product Diagram

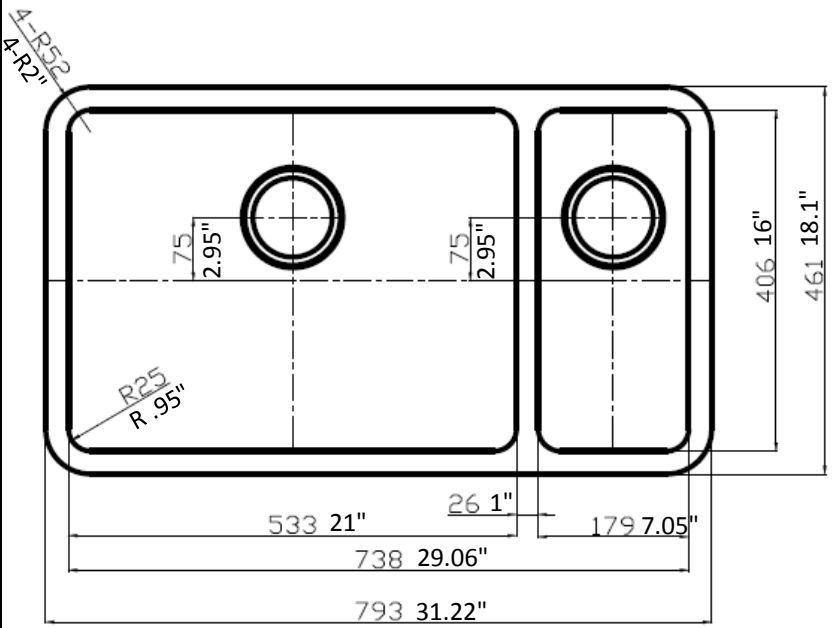

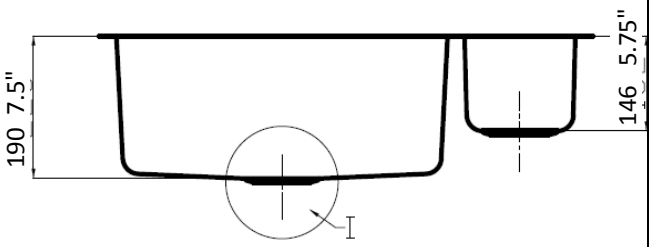

1-877-500-SINK (7465)

WEST COAST WAREHOUSE: 510-667-9998 EAST COAST WAREHOUSE: 404-691-5088

WWW.AMERISINK.COM