AMERISINK

HANDCRAFTED GLASS SINK

VESSEL GLASS SINK

AS908

Features

- 16.5" x 16.5" x 5.7"
- Handcrafted tempered glass sink
- Vessel sink
- Without faucet holes
- Without overflow
- Scratch and stain resistant
- Non-porous surface prevent fading and discoloration

Product Diagram

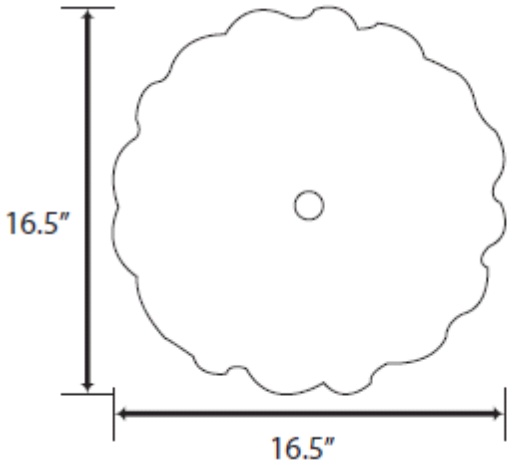

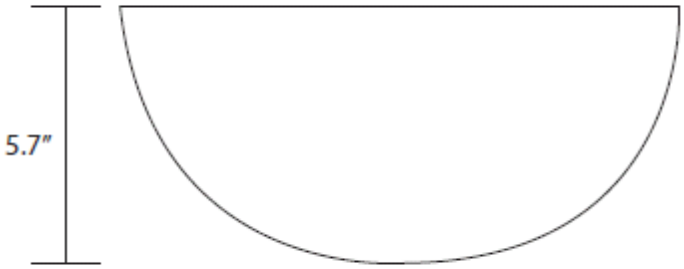

1-877-500-SINK (7465)

WEST COAST WAREHOUSE: 510-667-9998 EAST COAST WAREHOUSE: 404-691-5088

WWW.AMERISINK.COM